TABLE OF CONTENTS

0.1 Circulation List

0.2 Amendment Record

FOREWORD

1. SCOPE
2. REFERENCES
3. TERMS AND DEFINITIONS
4. REQUIREMENTS
5. TESTS AND INSPECTION
6. MARKING, LABELLING AND PACKING
7. DOCUMENTATIONS

ANNEX A: **Guaranteed Technical Particulars** *(to be filled and signed by the Manufacturer and submitted together with relevant copies of the Manufacturer's catalogues, brochures, drawings, technical data, sales records for previous five years, four customer reference letters, details of manufacturing capacity, the manufacturer's experience and copies of complete type test certificates and type test reports for tender evaluation, all in English Language)*

ANNEX B: DRAWINGS

0.1 Circulation List

COPY NO.	COPY HOLDER
1	Manager, Standards
Electronic copy (pdf) on Kenya Power server (http://172.16.1.40/dms/browse.php?fFolderId=23)	

0.2 Amendment Record

Rev No.	Date (YYYY-MM-DD)	Description of Change	Prepared by (Name & Signature)	Approved by (Name & Signature)
Issue 1 Rev 3	2008-04-09	Added requirement for Certificate of Compliance to ISO 1461 (clause 7) by the Hot Dip Galvanizer	Eng. S. Kimitei	G. Owuor
Issue 2 Rev 0	2015-08-20	Cancels and replaces KP1/3CB/TSP/03/003 Issue 1 Rev 3 dated 2008-04-09 and all previous issues	Michael Apudo	Dr. Eng. Peter Kimemia

FOREWORD

This specification has been prepared by the Standards Department and the Drawing Office both of The Kenya Power & Lighting Company Limited (KPLC) and it lays down requirements for steel structures for overhead lines. It is intended for use by KPLC in purchasing the items.

The supplier shall submit information which confirms manufacturer's satisfactory service experience with products which fall within the scope of this specification.

1. SCOPE

1.1. This specification is for galvanized steel works for overhead lines and pole-mounted transformers.

1.2. This specification covers the following steelworks:

a) Steel cross arms of different configurations for use on power poles.

b) Supporting steelworks for distribution transformers, fuses, isolating links and other line equipment.

c) Steelworks for supporting and terminating HV and MV/LV overhead lines and services.

1.3. The specification stipulates the minimum requirements for the galvanized steel works for overhead lines in the company and it shall be the responsibility of the supplier to ensure adequacy of the design, good engineering practice, adherence to the specification and applicable standards and regulations as well as ensuring good workmanship in the manufacture of the items for The Kenya Power & Lighting Company.

1.4. This specification does not purport to include all the necessary provisions of a contract.

2. REFERENCES

The following standards contain provisions which, through reference in this text constitute provisions of this specification. Unless otherwise stated, the latest editions (including amendments) apply.

ISO 1461: Metallic Coatings – Hot dip galvanized coatings on fabricated ferrous products – Requirements.

BS EN 1011 Part 1:	Welding. Recommendations for welding of metallic materials. General guidance for arc welding
BS EN 10056 – 1:	Specification for structural steel equal and unequal angles. Dimensions
BS EN 10 025:	Hot rolled products of structural steel
BS 6722:	Recommendations for dimensions of metallic materials
BS 4 Part 1:	Structural steel sections. Specification for hot-rolled sections
BS EN 20273:	Fasteners. Clearance holes for bolts and screws
BS 4-1:2005	Structural steel sections. Specification for hot-rolled section
KS 02-572:	Specification for hot-rolled structural steel sections
ENA TS 43- 95:	Steelwork for Overhead Lines

3. TERMS AND DEFINITIONS

For the purpose of this specification, the definitions in the reference standards shall apply.

4. REQUIREMENTS

4.1. SERVICE CONDITIONS

The steel structures shall be suitable for continuous use outdoors in tropical areas at altitudes of up to 2200m above sea level, humidity of up to 90%, average ambient temperature of +30°C with a minimum of -1°C and a maximum of +40°C and saline conditions along the coast.

4.2. STEELWORKS

4.2.1. The following general requirements shall apply to the range of steelwork required for the construction of overhead lines on wood, concrete & steel poles, attachments to buildings and tower lines. In general items shall comply with ENA TS 43- 95 issue 5 1989.

4.2.2. Unless otherwise specified the steel used in the manufacture of items to this specification shall conform to BS EN 10 025 Grade S.275JR and shall have the following properties:

a) The tensile strength shall be 410 to 560MPa;
b) The yield strength shall be 275MPa,
c) Minimum percentage elongation after fracture ($L_0 = 5.65 \sqrt{So}$) shall be 23% ;
d) Impact strength of minimum energy shall be 27 J at a temperature of 20^0C;
e) Chemical composition of the ladle analysis for flat and long products of this steel grade shall be as per Table 1:

Table 1: Ladle analysis

Properties	Requirement
Designation	S.275JR
Method of de-oxidation	FN
C in % max. for nominal product thickness in mm	0.21
Si % max.	-
P % max.	1.50
S % max.	0.035
N % max.	0.035
Cu % max.	0.012
Other % max.	0.55
FN = rimming steels not permitted; FF = fully killed steel (see clause 6.2.2 of BS EN 10025-2).	

4.2.3. Equal and unequal angle sections shall conform to BS EN 10056 Part 1. Channel sections shall conform to BS 4, Part 1 and KS 02-572. Flat sections shall comply with BS 6722.

4.2.4. Bending of flat straps shall be carried out cold then stress-relieved at 600^0C minimum or alternatively hot bent.

4.2.5. All ferrous materials shall be hot dip galvanized in accordance with ISO 1461 after fabrication and as per clause 4.3.6.

4.2.6. Welding shall be carried out in accordance with BS EN 1011 Part 1. After welding and before galvanizing, welds shall be thoroughly cleaned to remove slag and splatter, particular attention being paid to the toes of the welds and to the prevention of entrapment of slag and splatter. The preferred method of cleaning welds before galvanizing is by sandblasting.

4.2.7. Dimensions are subject to the following tolerances, unless otherwise stated: -

a) Dimensions up to and including 10 mm - +1mm
b) Dimensions from 10 mm upto and including 50 mm - ±1 mm
c) Dimensions greater than 50 mm - ± 2 mm

4.2.8. Limiting dimensions of holes shall be within the tolerances or the 'medium fit series' of BS EN 20273, the hole diameters shown on the drawing correspond to the 'minimum diameter' column of the 'medium fit series'.

4.3. CONSTRUCTION/FABRICATION

4.3.1. All materials before and after fabrication shall be straight and free from twists. The material shall be free from blisters, scale and other defects.

4.3.2. Erection clearance for cleated ends of members connecting steel to steel shall not be greater than 2mm at each end.

4.3.3. The steel structures shall be assembled using bolts and nuts conforming to ISO 898-1 & 2. Bolt holes shall not be more than 2mm greater than the diameter of the bolt for bolts up to 24mm diameter and with tolerances as per clause 4.2.8.

4.3.4. Cutting may be by shearing, cropping, sawing or machine flare cutting. Sheared or cropped edge shall be dressed to a neat finish and be free from distortion where parts are to be in metal contact.

4.3.5. All holes shall be drilled in one operation and burrs shall be removed. Holes shall not be formed by a gas cutting process. All matching holes for bolts shall register with each other so that a gauge 2 mm less in diameter than the diameter of the bolt shall pass freely through the assembled members in a direction at right angle to such members.

4.3.6. Galvanizing

4.3.6.1. All materials to be galvanized shall be of the full dimensions shown or specified and all punching, cutting, and the removal of burrs shall be completed before the galvanizing process commences.

4.3.6.2. All galvanizing shall be done by the hot dip process (molten Zinc), not less than 98% of which must be pure Zinc. The process shall be in accordance with ISO 1461.

4.3.6.3. The zinc coating shall be uniform, clean, smooth and as free from spangle as possible.

4.3.6.4. Where specifically requested by KPLC, galvanized steel structures shall be treated after galvanizing with Sodium Dichromate Solution.

Table 1: Zinc coating thickness

	Steel Structures for Inland installations	Steel Structures for installation along the coast
Minimum average coating thickness	85µm	110µm
Post-treatment (chromating)	See Tender Requirements	See Tender Requirements

5. TESTS AND INSPECTION

5.1. The steel structures for overhead lines shall be inspected and tested in accordance with the requirements of BS EN 10025-3:2004, ISO 1461:2009, BS EN 1011 Part 1, applicable Kenyan standards and all the provisions of this specification. It shall be the responsibility of the supplier to perform or to have performed the tests specified and whatever other tests he normally performs at works.

5.2. Copies of previous Type Tests Reports issued by a third party testing laboratory that is accredited to ISO/IEC 17025 shall be submitted with the tender for the purpose of technical evaluation. The accreditation certificate to ISO/IEC 17025 for the same third party testing laboratory used shall also be submitted with the tender document (all in English Language). The type tests shall include:

a) Steelwork shall be inspected and tested in accordance with BS EN 10025 – 3: 2004 Type S.275JR. The shall include:
   (i) Classification and designation – clause 4.0
   (ii) Manufacturing process – clause 6.0
   (iii) General requirements – clause 7.1
   (iv) Chemical composition – clause 7.2
   (v) Mechanical properties – clause 7.3
   (vi) Technological properties – clause 7.4
   (vii)Surface properties – clause 7.5
   (viii) Internal soundness – clause 7.6
   (ix) Inspection – clause 8.0

b) Tests on galvanizing shall be carried on the finished steel in accordance with the requirement of ISO 1461:2009 and this specification. Test reports shall be completed (by the manufacturer) and submitted to KPLC for approval before shipment/delivery of the materials. The test reports shall be submitted together with a Certificate of Compliance to ISO 1461 by the Hot Dip Galvanizer for every consignment. They shall include:

(i) Sampling – clause 5.0
(ii) Appearance – clause 6.1
(iii) Thickness – clause 6.2
(iv) Renovation – clause 6.3
(v) Adhesion - clause 6.4
(vi) Acceptance criteria – clause 6.5

c) Test on welds shall be done as per BS EN 1011-1:2009 and shall include fusion welding processes as per clause 7.0.

5.3. Routine and sample test reports for the steel structures for overhead lines to be supplied shall be submitted to KPLC for approval before shipment/delivery of the goods. KPLC Engineers will witness tests at the factory before shipment. Tests to be witnessed by KPLC Engineers at the factory before shipment shall include all the tests in clause 5.2 of this specifications.

5.4. On receipt of the steel structures, KPLC may perform any of the tests specified in order to verify compliance with this specification. The supplier shall replace without charge to KPLC steel structures which upon examination, test or use fail to meet any of the requirements in the specification.

6. MARKING, LABELLING AND PACKING

6.1. Marking, labelling

6.1.1. The products shall be legibly marked using methods such as stamping or laser marking with the following:

a) The grade, the quality and if applicable the delivery condition (see EN 10025-2 and EN 10025-5) indicated by its abridged designation.
b) A number by which the cast and if applicable the sample can be identified (if inspection is by cast);
c) The manufacturer's name or trademark;

d) The mark of the external inspection representative (where applicable).

NOTE: *This depends on the type of inspection document (see clause 8.2 of BS EN 10025-1).*

6.1.2. Marking shall be at a position close to one end of each product or on the end cut face at the manufacturer's discretion, but shall be so positioned as to avoid confusion with regulatory marking. Where regulatory marking also meets the requirements for this clause, this Clause will be deemed to have been satisfied without repetition of the information provided with the regulatory marking.

6.2. Packaging

6.2.1. The supplier shall ensure that each item is suitably packaged ensuring it is "fit for service" prior to installation taking account of the potential for an outdoor storage environment. All packaging shall be sufficiently durable giving regard to the function, reasonable use and contents of the packaging. Where steelwork sets are required they shall be supplied securely packaged together.

6.2.2. Palletised goods shall be supplied on standard 1200mm x 1000mm pallets.

6.2.3. Clearly legible, easily identifiable, durable and unambiguous labelling shall be applied to each individual and where relevant multiple package of like products. Where product packages tendered are made up of sub packages, each sub package shall be marked. As a minimum requirement the following shall be included.

a) Manufacturer's trademark or name
b) Supplier's trademark or name
c) Description of item
d) Date of packaging and/or batch number
e) KPLC product code
f) Weight

6.2.4. Each assembly and package of items associated with this specification shall be suitably marked with reference to KPLC Stores Code.

6.2.5. Where an item includes a number of components to form a complete assembly, all component parts shall be included in one composite package which shall be firmly strapped or bound together.

7.0. DOCUMENTATION

7.1. The bidder shall submit its tender complete with technical documents required by Annex A (Guaranteed Technical Particulars) for tender evaluation. The technical documents to be submitted (all in English language) for tender evaluation shall include the following:

a) Guaranteed Technical Particulars fully filled and signed by the manufacturer;
b) Copies of the Manufacturer's catalogues, brochures, drawings and technical data of each steel structure on tender;
c) Sales records and customer reference letters;
d) Details of manufacturing capacity and the manufacturer's experience;
e) Copies of required type test reports by a third party testing laboratory accredited to ISO/IEC 17025;
f) Copy of accreditation certificate to ISO/IEC 17025 for the testing laboratory.
g) Manufacturer's warranty and guarantee
h) Manufacturer's letter of authorization, copy of the manufacturer's ISO 9001:2008/ KEBS Diamond mark certificate and other technical documents required in the tender.

7.2 The successful bidder (supplier) shall submit the following documents/details to The Kenya Power & Lighting Company for approval before manufacture:

a) Guaranteed Technical Particulars signed by the manufacturer;
b) Design Drawings with details of each steel structure to be manufactured for KPLC.
c) Quality assurance plan (QAP) that will be used to ensure that the design, material; workmanship, tests, service capability, maintenance and documentation will fulfil the requirements stated in the contract documents, standards, specifications and regulations. The QAP shall be based on and include relevant parts to fulfil the requirements of ISO 9001:2008
d) Detailed test program to be used during factory testing;
e) Marking details and method to be used in marking the each steel structure;
f) Manufacturer's undertaking to ensure adequacy of the design, good engineering practice, adherence to the specification and applicable standards and regulations as well as ensuring good workmanship in the manufacture of the steel structures for The Kenya Power & Lighting Company;
g) Packaging details (including packaging materials).

7.3 The supplier shall submit recommendations for use, care, storage and routine inspection/testing procedures, all in the English Language, during delivery of the each steel structure to KPLC store

ANNEX A: Guaranteed Technical Particulars *(to be filled and signed by the Manufacturer and submitted together with relevant copies of the Manufacturer's catalogues, brochures, drawings, technical data & calculations, sales records for past five years, four customer reference letters, details of manufacturing capacity, the manufacturer's experience, copies of complete type test reports and accreditation certificate to ISO/IEC 17025 for the third party testing laboratory for tender evaluation, all in English Language).*

BIDDERS NAME & ADDRESS .....

.

TENDER NO .....

	Description			Bidders offer
	Name of Manufacturer & Country of manufacture of the			State
	Type/Model Reference Number			State
1.	Scope			
	Type and Size			
	Steel cross arms of different configurations for use on power poles			State
	Supporting steelworks for distribution transformers, fuses, isolating links and other line equipment.			State
	Steelworks for supporting and terminating HV and MV/LV overhead lines and services.			State
2.	Standards of manufacture			State
3.	Terms and definitions			State
4.	Requirements			State
4.1	Service Conditions			State
4.3	Steel works	Items shall be as per ENA TS 43- 95, Issue 5		State the offered values as per the test reports, catalogues, brochures, and or drawings for each item offered.
		Physical characteristics	Grade of steel	
			Standard of manufacture	
			Tensile strength, MPa	
			Yield Strength, MPa	
			Min, % elongation after fracture($Lo=5.65*S^{1/2}$)	
			Impact strength (J)	
		Chemical composition of steel	Designation	
			Method of de-oxidation	
			C in % max. for nominal product thickness in mm	
			Si % max.	

			P % max.	
			S % max.	
			N % max.	
			Cu % max.	
			Other % max.	
	Standard of manufacture of other materials		Equal and unequal angle sections	
			Channel sections	
			Flat sections	
	Bending of flat sections		Method	
			Temperature	
	Welding		Standard	
			Type	
			Method	
	Dimension tolerances		Up to and including 50mm	
			Greater than 50mm	
	Construction		Finish	
			Erection clearance for cleated ends	
			Bolt tolerances	
			Cutting method	
		Holes	Method of drilling and cutting	
			Tolerances	
	Galvanizing		Standard it conforms to	
			Process	
			Purity of zinc used	
		Coating thickness	Inland	
			Coastal	
			Treatment after galvanizing	
				State
4.5	Quality Management System			State
	Quality Assurance Plan			State
	Copy of ISO 9001:2008 Certificate			State
	Manufacturer's experience			State
	Manufacturing Capacity (units per month)			State
	List of previous customers			State
	Customer reference letters			State
5.1	Test standards and responsibility of carrying out tests			provide
5.2	Copies of Type Test Reports submitted with tender			provide

5.3	Acceptance tests to be witnessed by KPLC at factory before shipment	provide
5.4	Test reports to be submitted by supplier to KPLC for approval before shipment	provide
5.5	Replacement of rejected steel structures	provide
6.1	Marking	provide
6.2	Packing	provide
7.1	Documents submitted with tender	provide
7.2	Documents to be submitted by supplier to KPLC for approval before manufacture	provide
8.0	Manufacturer's Guarantee and Warranty	provide
9.0	List catalogues, brochures, technical data and drawings submitted to support the offer	provide
10.0	List customer sales records and reference letters submitted to support the offer	provide
11.0	List Test Certificates submitted with tender	provide
12.0	List test reports of the surge arresters to be submitted to KPLC for approval before shipment	provide
13.0	Statement of compliance to specification (indicate deviations if any & supporting documents)	provide

NOTE:

1) *Bidders shall give full details of the offered values for the items on order as per Annex A. The details provided shall conform to the test reports and their certificates as required by clause 5.2., well labeled drawings complete with dimensions, catalogues and/or brochures for the purpose of tender evaluation. Bidders who shall have not complied by this requirement shall be automatically disqualified from bidding this item.*

2) *The schedule in Annex A does not in any way substitute for detailed information required elsewhere in the specification.*

.....

Manufacturer's Name, Signature, Stamp and Date

***ANNEX B: DRAWINGS AS PER ENATS 43- 95** Issue 5 1989*

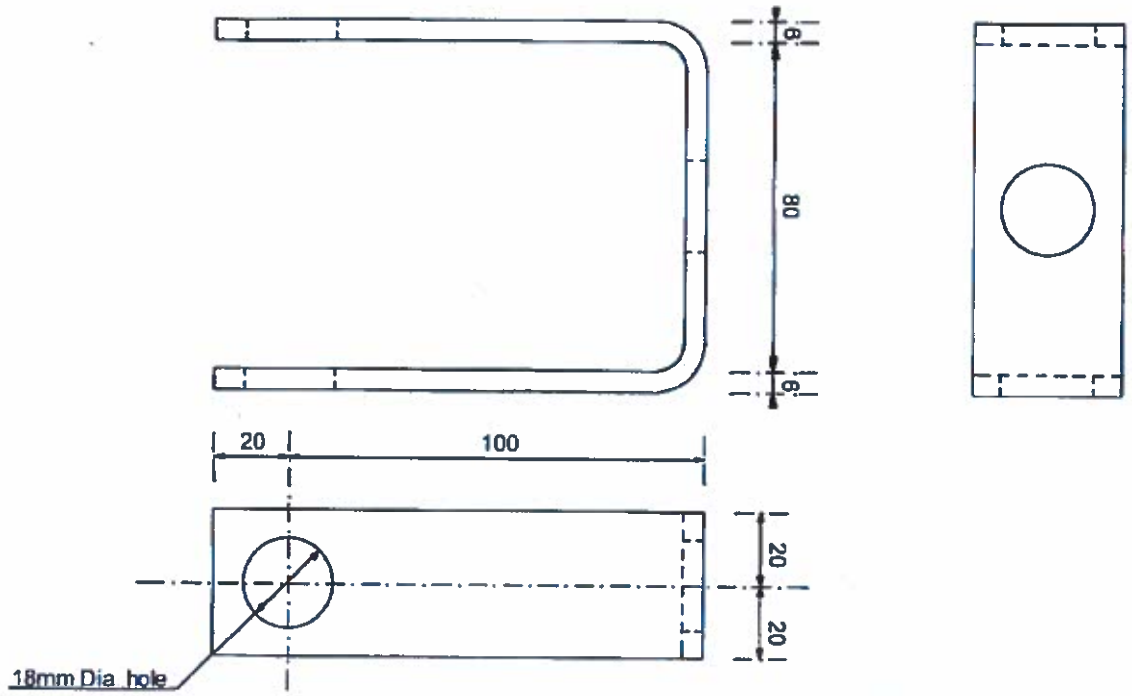

FIG. 1: D – IRON (LV Insulator Bracket): KPLC CODE 181201 (332mm x 40mm x 6mm structural steel, galvanized)

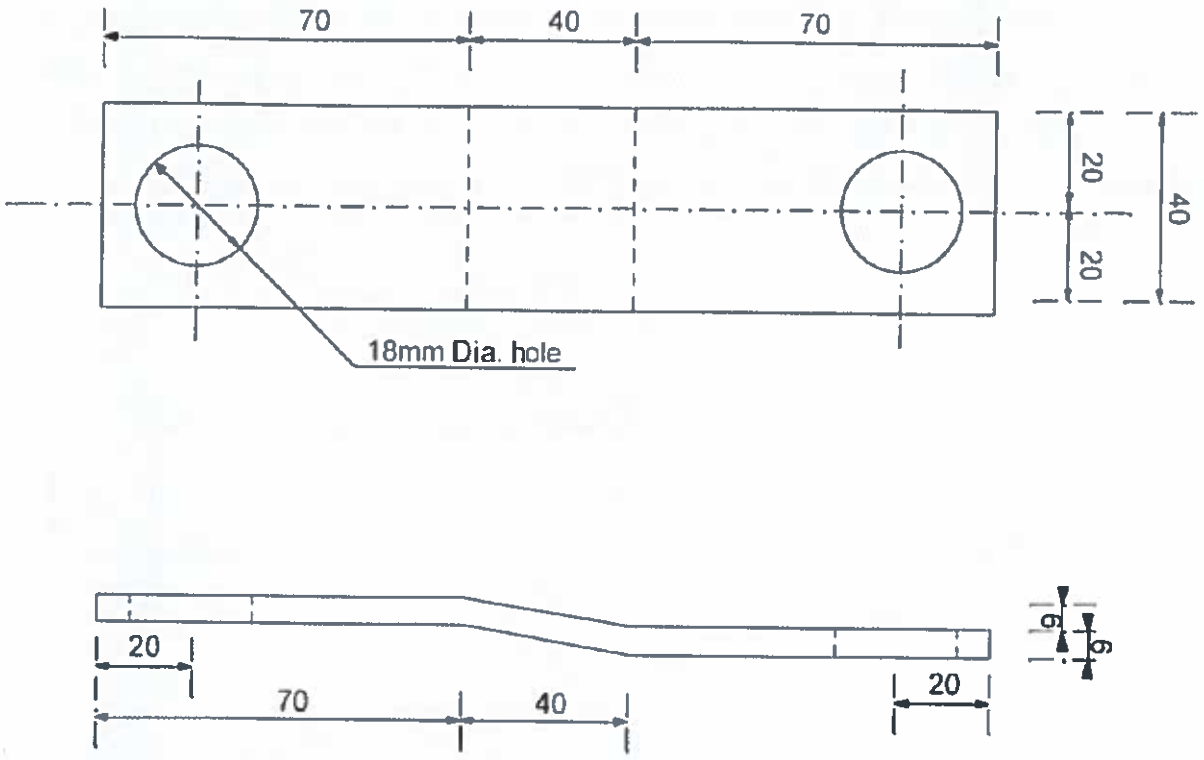

FIG. 2: SHACKLE STRAP (LV Extension Strap): KPLC CODE 188104 (180mm x 40mm x 6mm structural steel, galvanized)

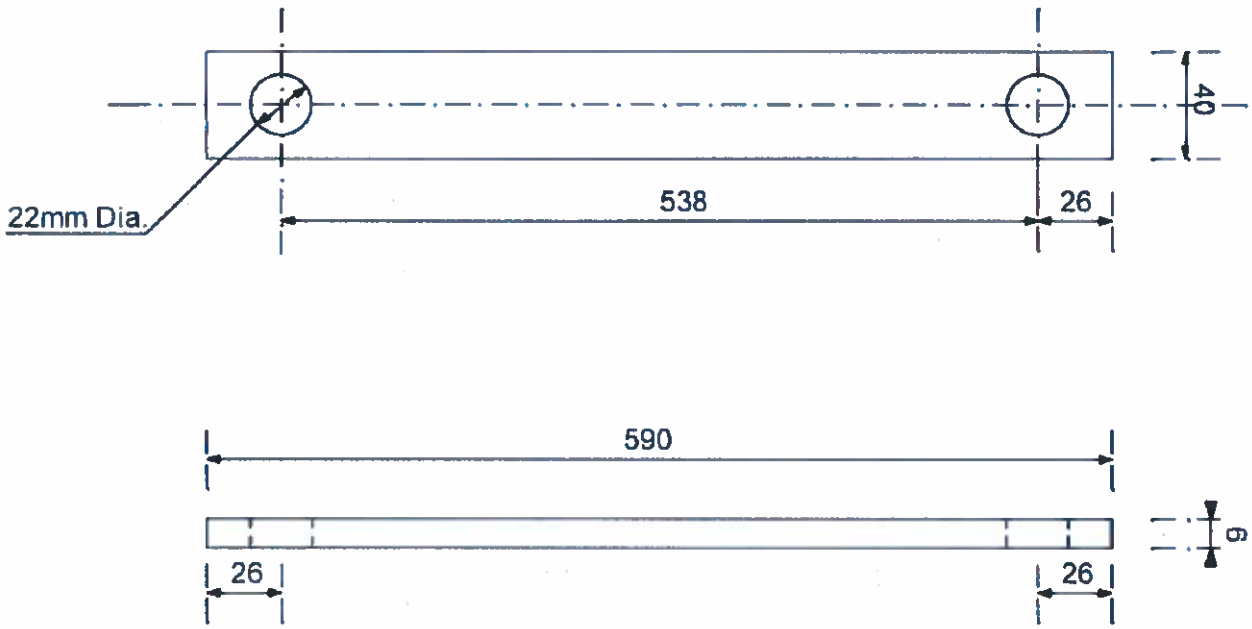

FIG. 3A: 11KV FLAT TIE STRAP: KPLC CODE 188115 (590mm x 40mm x 6mm structural steel, galvanized)

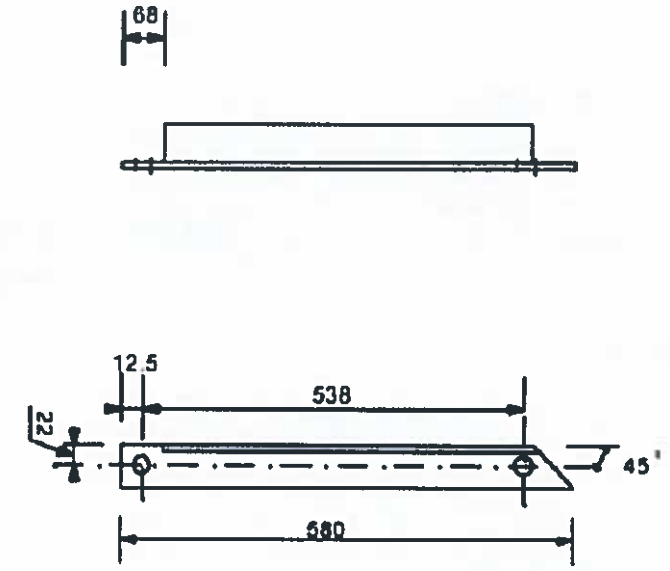

1 - OFF R - HAND

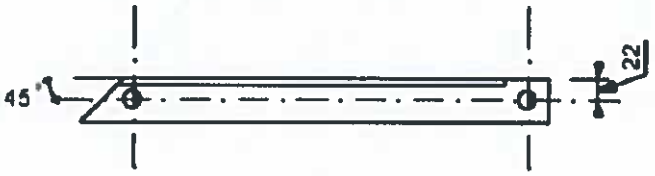

1 - OFF L - HAND

68 x 68 x 6.25mm MS ANGLE

FIG. 3B: 11KV ANGLE TIE STRAP: KPLC CODE 188111 (580mm x 68mm x 68mm x 6.25mm structural steel angle, galvanized)

NOTE: *To be supplied in pairs, application similar to that shown in Fig. 17.*

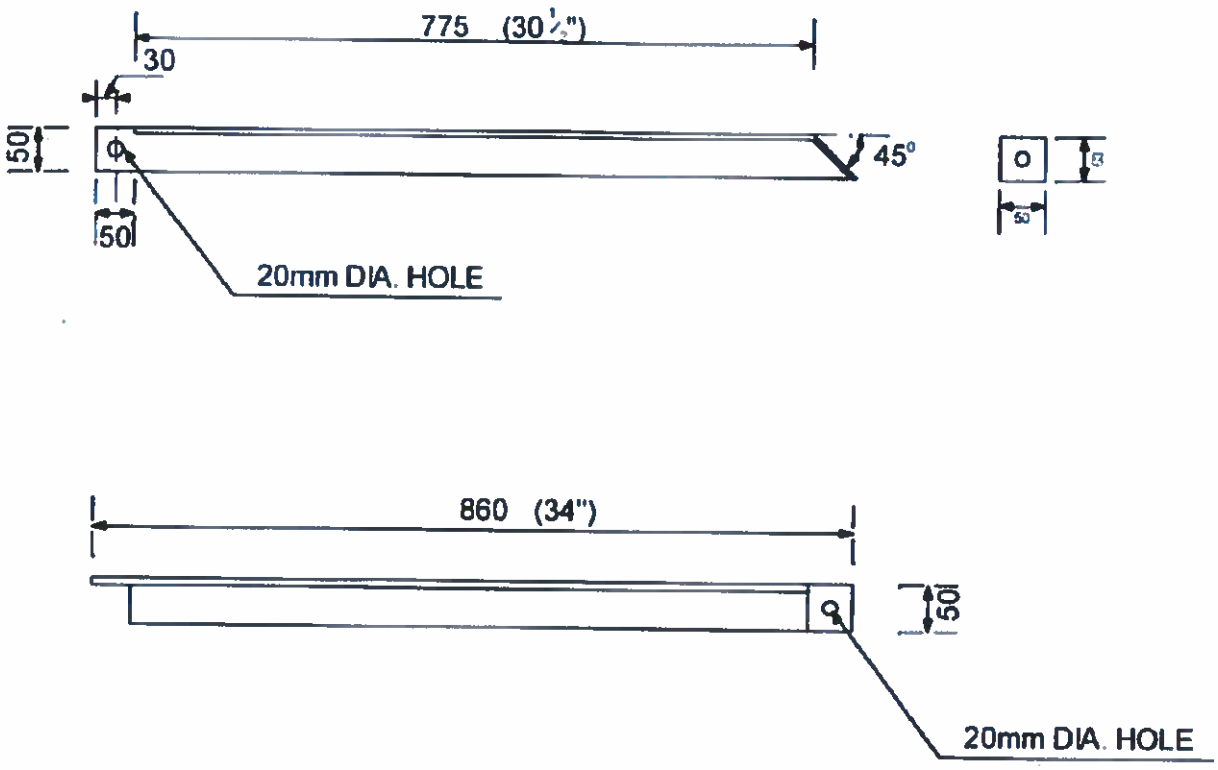

FIG. 4: 33KV TIE STRAP: KPLC CODE 188108 (860mm x 50mm x 50mm x 6mm structural steel angle, galvanized)

The item to be supplied in pairs (see Fig. 16 showing application of the item.

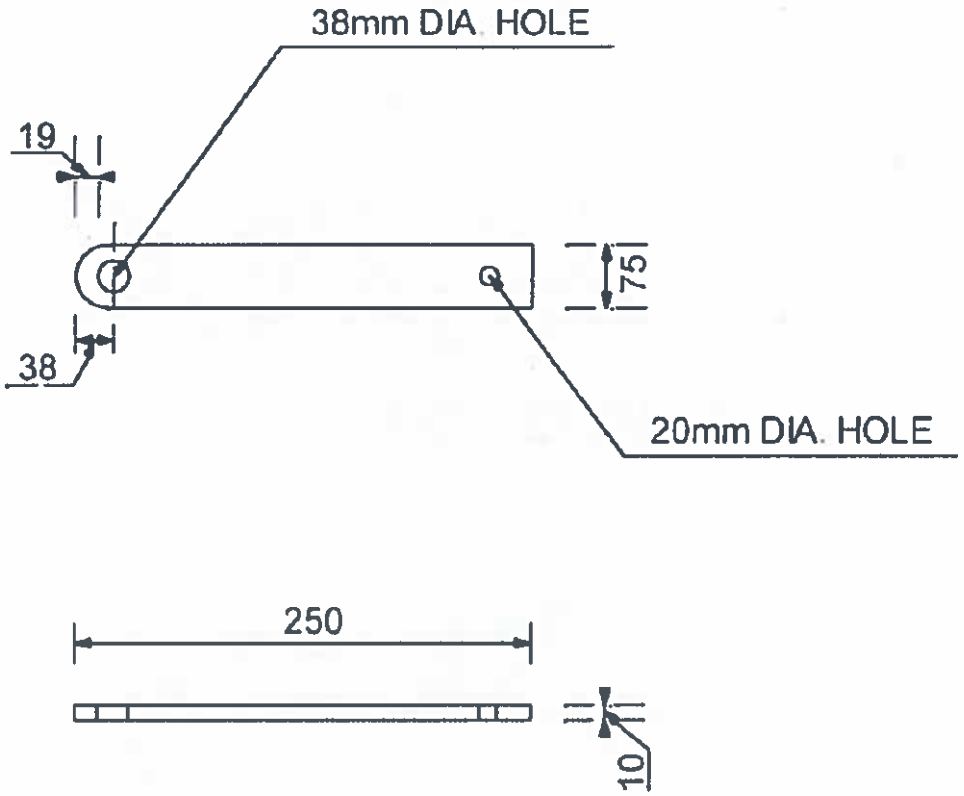

FIG. 5: 11KV TERMINAL STRAP: KPLC CODE 188107 (250mm x 75mm x 10mm structural steel flat, galvanized)

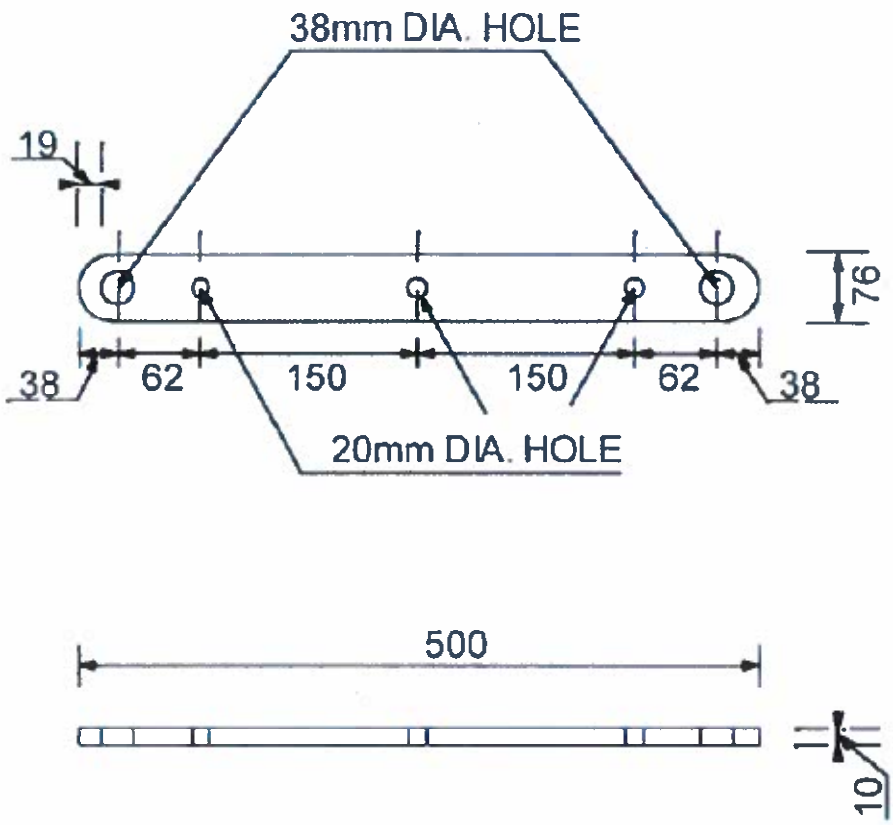

FIG. 6: 33kV TERMINAL STRAP: KPLC CODE 188109 (500mm x 76mm x 10mm structural steel flat, galvanized)

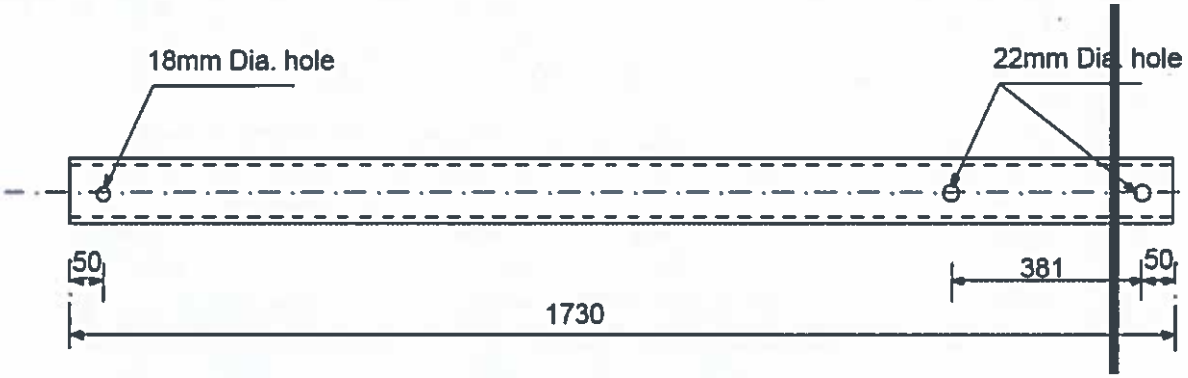

FIG. 7: EARTH STOCK: KPLC CODE 186928 ('U' Channel 1730mm x 100mm x 50mm x 6mm structural steel, galvanization.

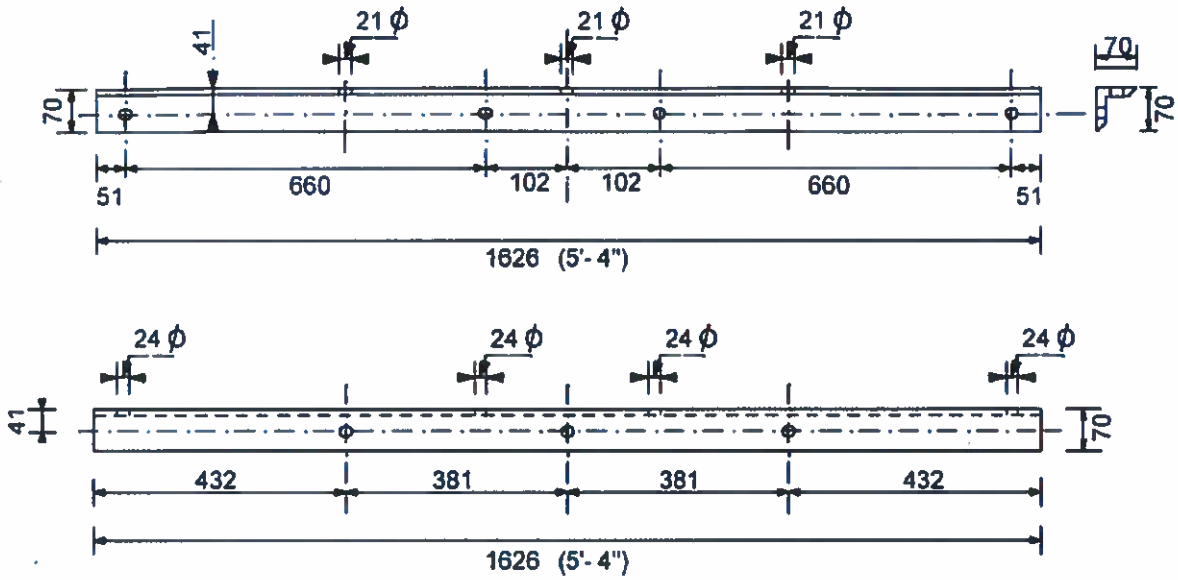

FIG. 8A: 11KV CROSS ARM: KPLC CODE 182911 (L1625mm x 70mm x 70mm x 9.5mm structural steel angle, galvanized)

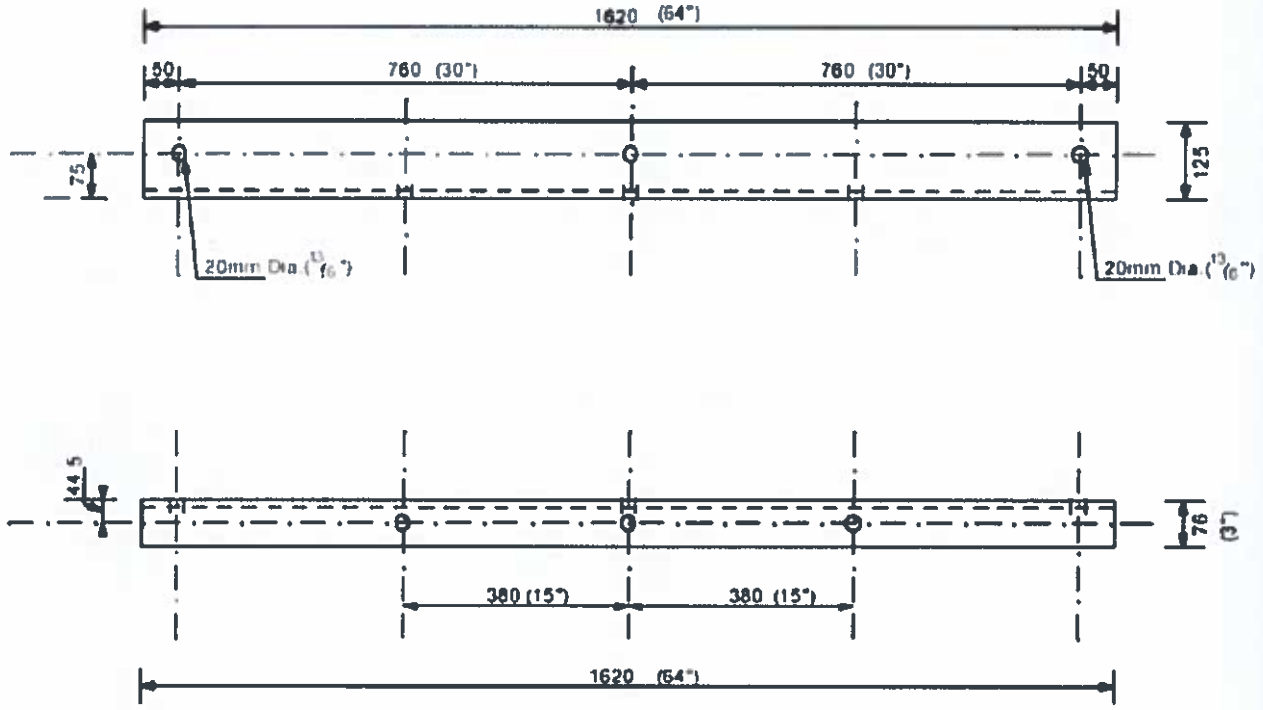

FIG. 8B: 11kV TERMINAL CROSS ARM: KPLC CODE 182914 (L1620mm x 125mm x 76mm x 9.5mm structural steel angle, galvanized)

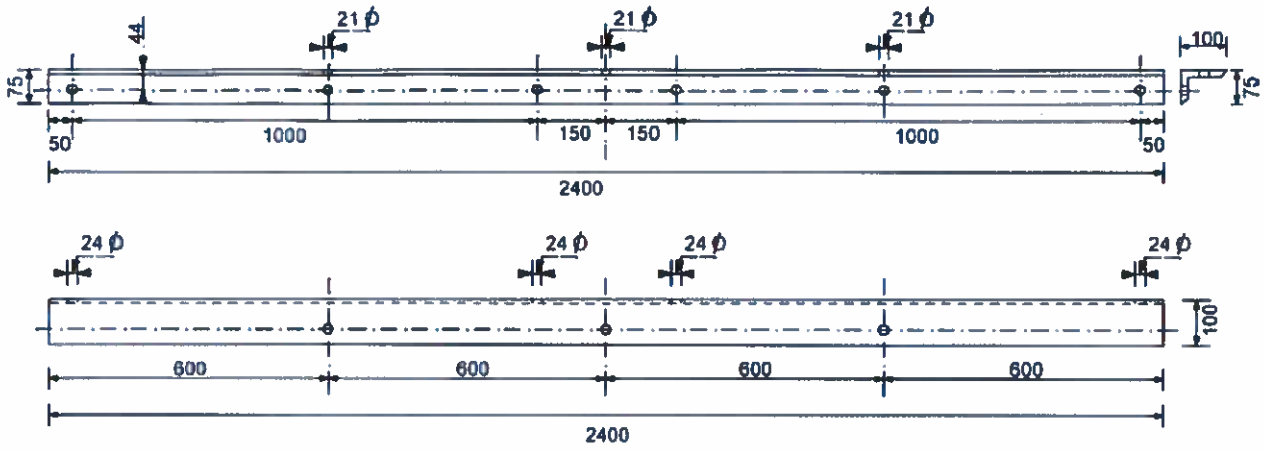

FIG. 9: 33kV CROSS ARM: KPLC CODE 182960 (L2400mm x 100mm x 75mm x 9.5mm structural steel angle, galvanized)

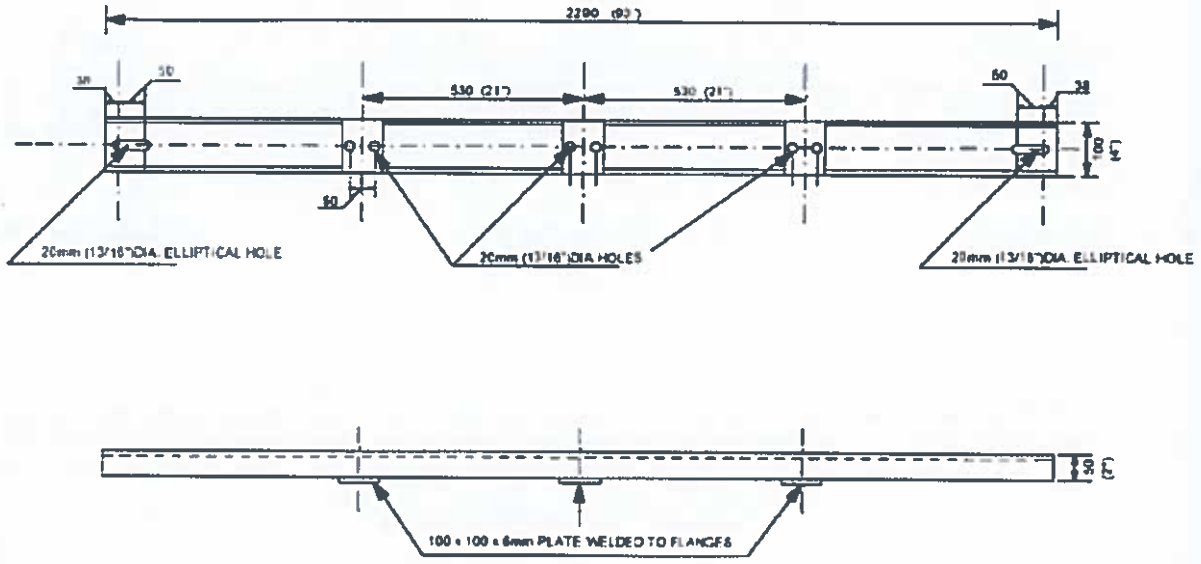

FIG. 10: FUSE/SOLID LINK CROSS MEMBER CHANNEL: KPLC CODE 186925 - (U2290 x 100 x 50x6mm structural steel, galvanized) **KPLC CODE 186926** - (U2290 x 125 x 64x6mm structural steel, galvanized)

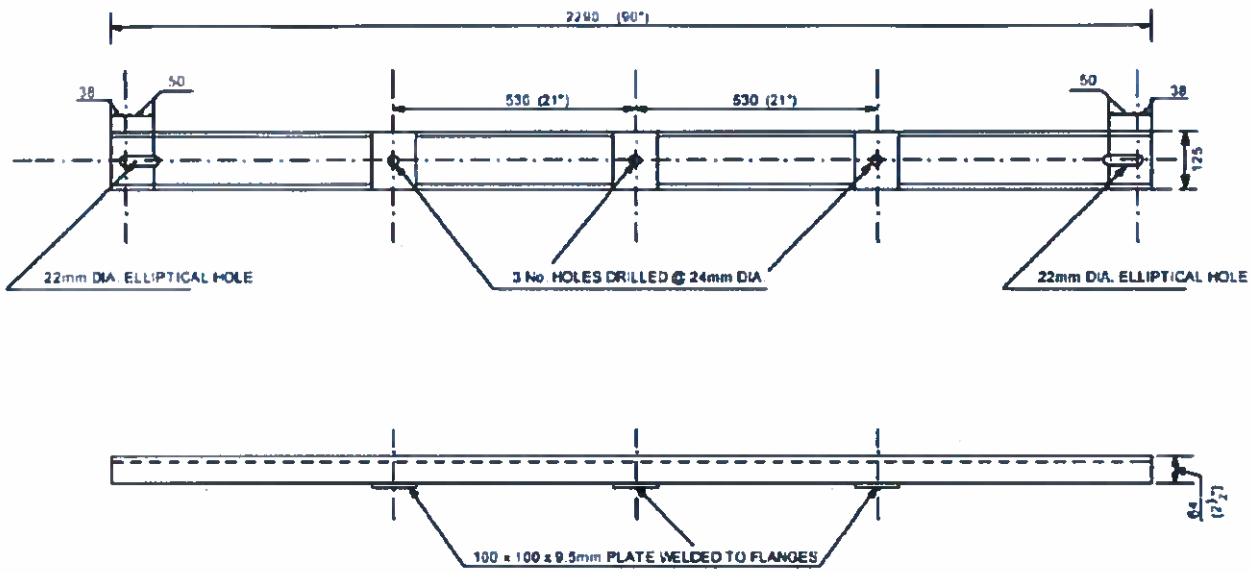

FIG. 11: STEADY CROSS MEMBER

KPLC CODE 186921 FOR TX UP TO 200 KVA: (U2290mm x 100mm x 50mm x 6mm structural steel, galvanized)

KPLC CODE 186922 FOR TX 200 TO 315 KVA: (U2290mm x 125mm x 64mm x 9.5mm structural steel, galvanized)

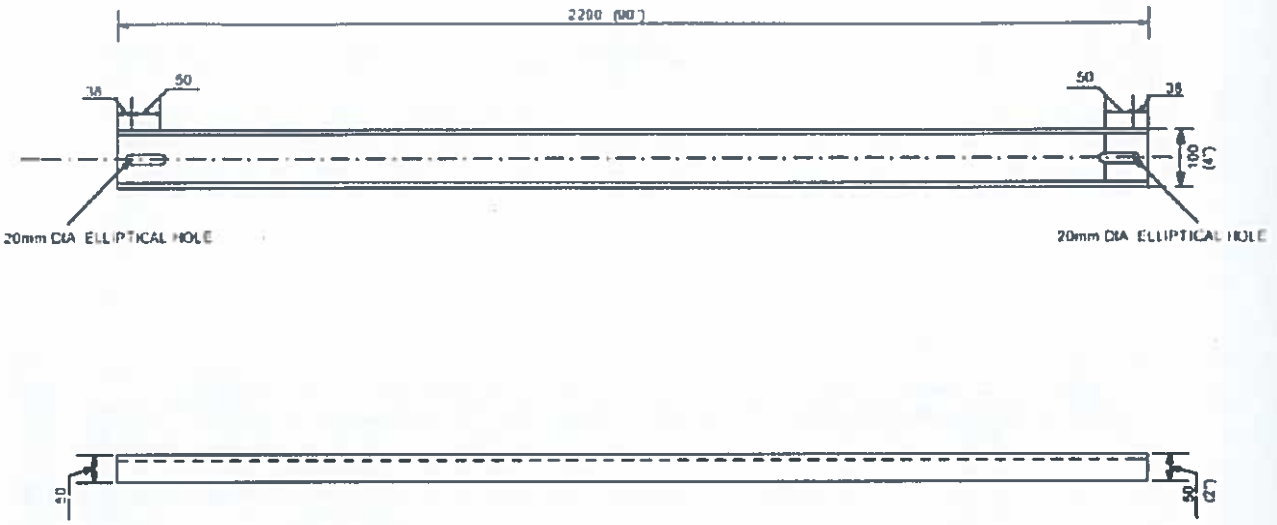

FIG. 12: TRANSFORMER PLATFORM UP TO 200 KVA KPLC CODE 186923: (U2290mm x100mm x 50mm x 6mm structural steel, galvanized)

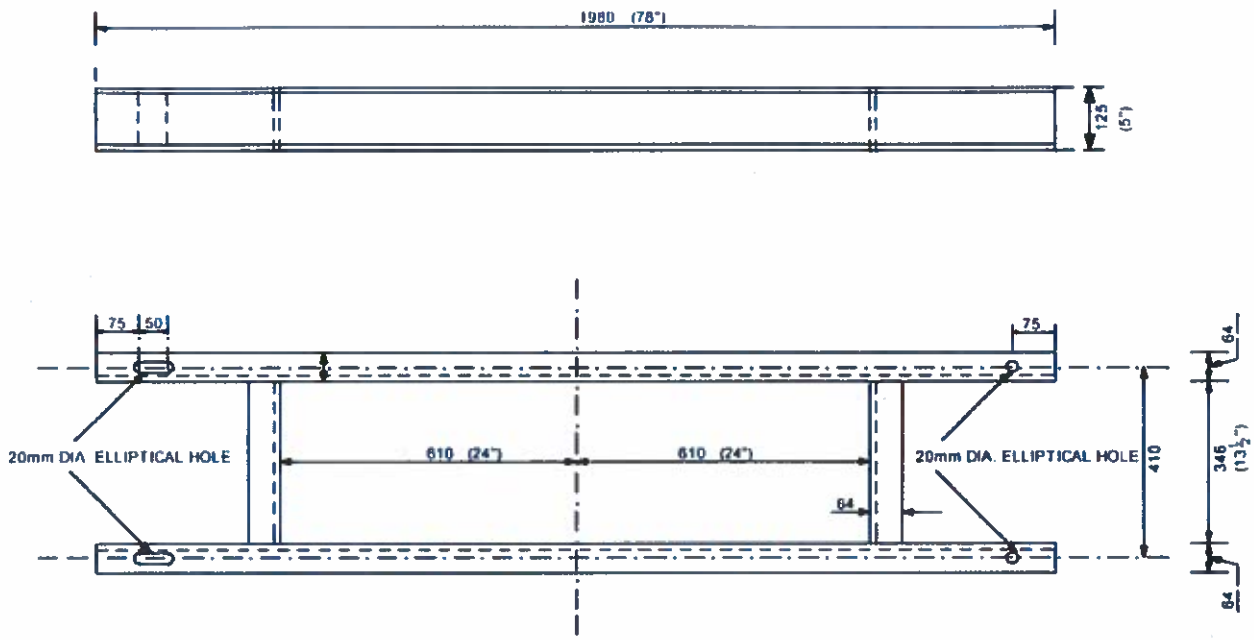

FIG. 13A: TRANSFORMER PLATFORM 315 KVA KPLC CODE 186924 (1980mm x 125mm x 64mm x 6mm structural steel, galvanized) **(To be complete with mounting brackets in Fig. 13B)**

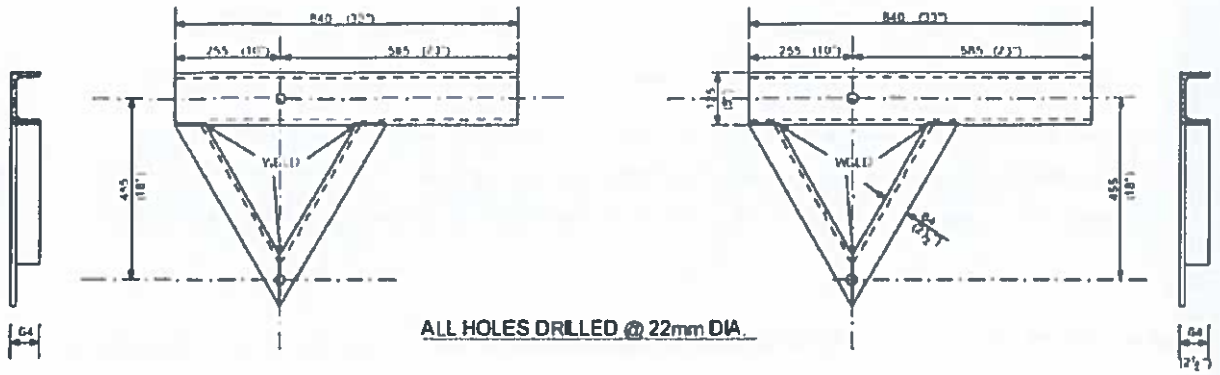



LEFT HAND BRACKET

RIGHT HAND BRACKET

FIG. 13B: MOUNTING BRACKETS FOR TRANSFORMER PLATFORM 315 KVA (see Fig 13A)

(840mm x 125mm x 64mm x 6mm 'U' Channel structural steel, galvanized), (64mm x 64mm x 6mm structural steel angle, galvanized)

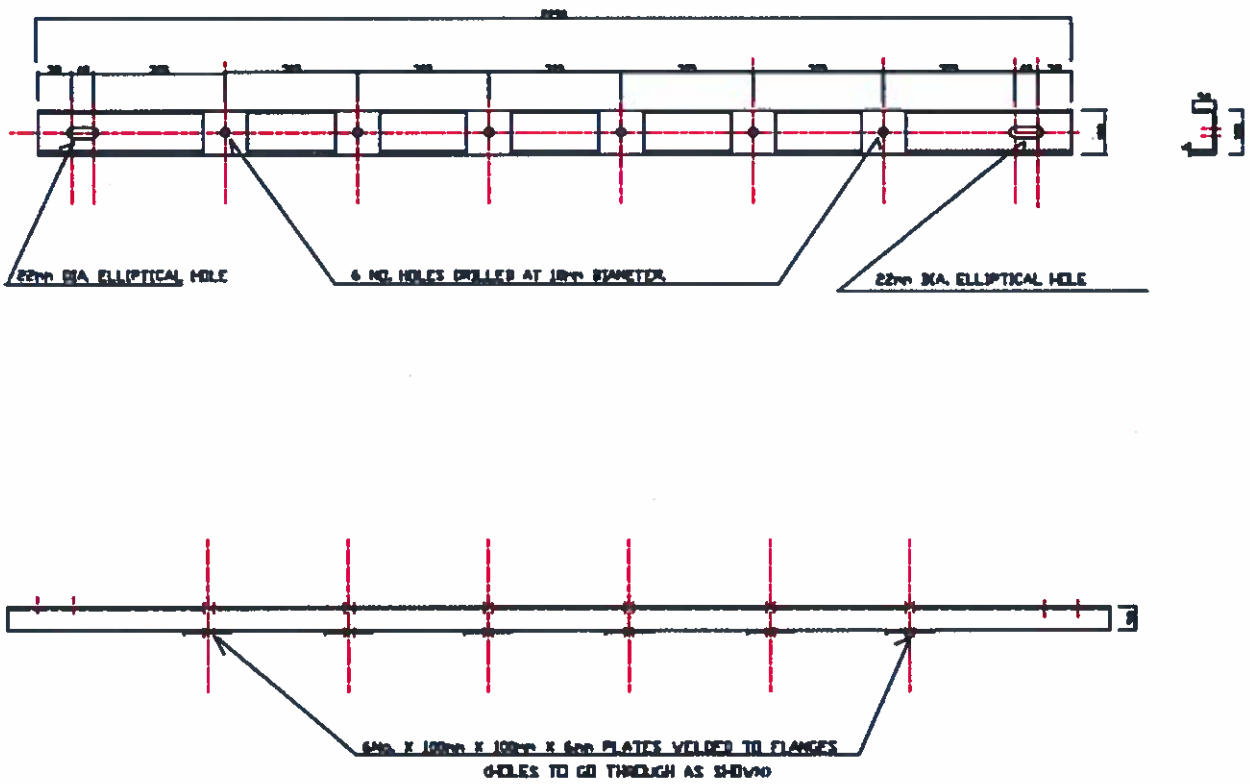

LV FUSE BAR, STEEL U- CHANNEL (2290mmX100mmX50mmX6mm)

DRG. No. KPLC/FB/CP/001 DATE: 15th September, 2005

FIG. 14: LV FUSE BAR U-CHANNEL (2290x100x50x6mm structural steel channel, galvanized)), CODE 186927

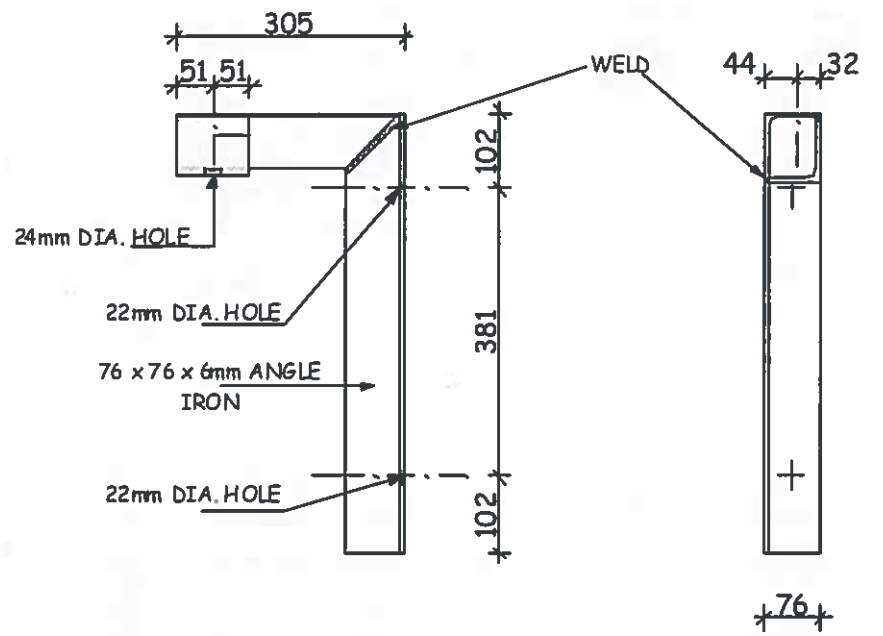

TITLE	CHECKED BY:	Date:
FIG. 15: CODE181228 - BRACKET TOP POLE 33KV DELTA CONS.	S. KIMITEI	10/April/07
	DRAWN BY:	Date:
	J. M.KAHARE	10/April/07

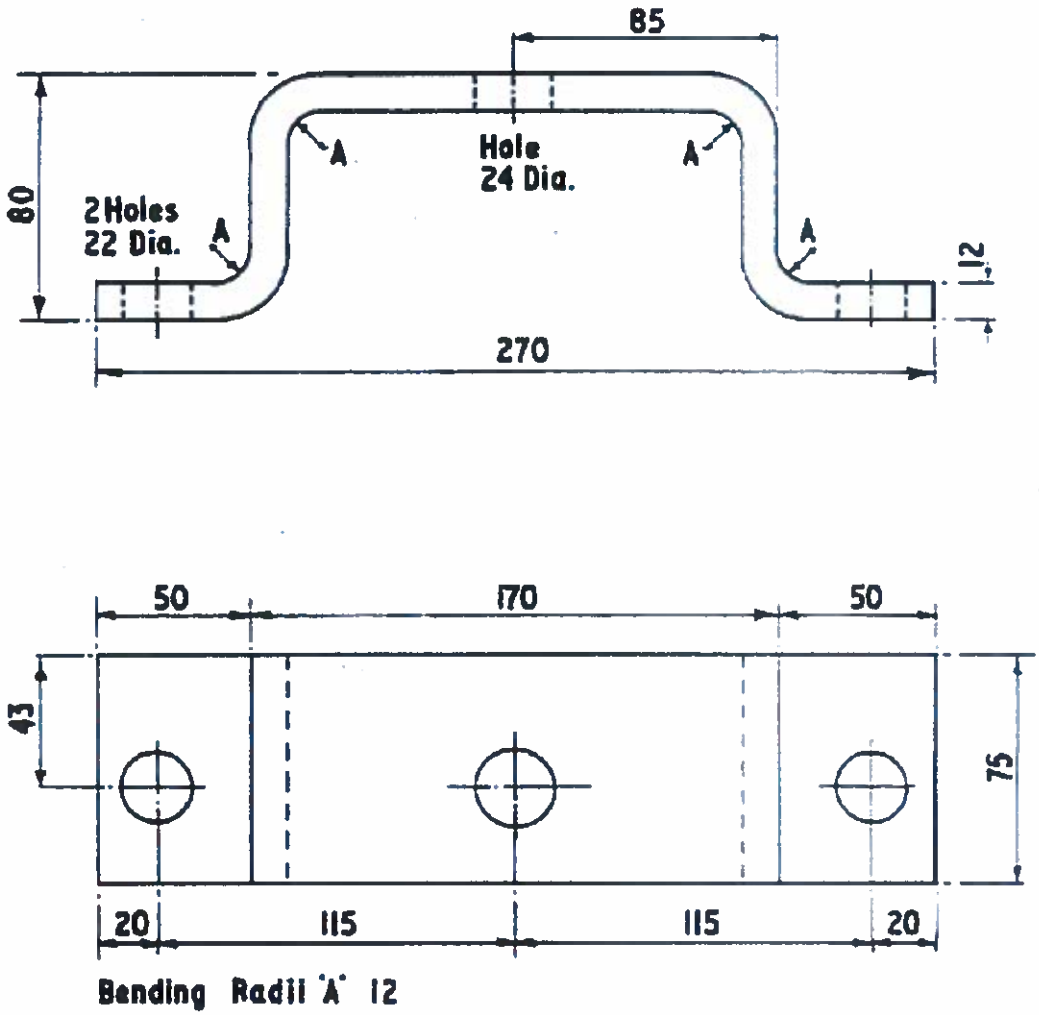

FIG. 14: BRACKET INSULATOR - HV, - (structural steel, galvanized) CODE 186947

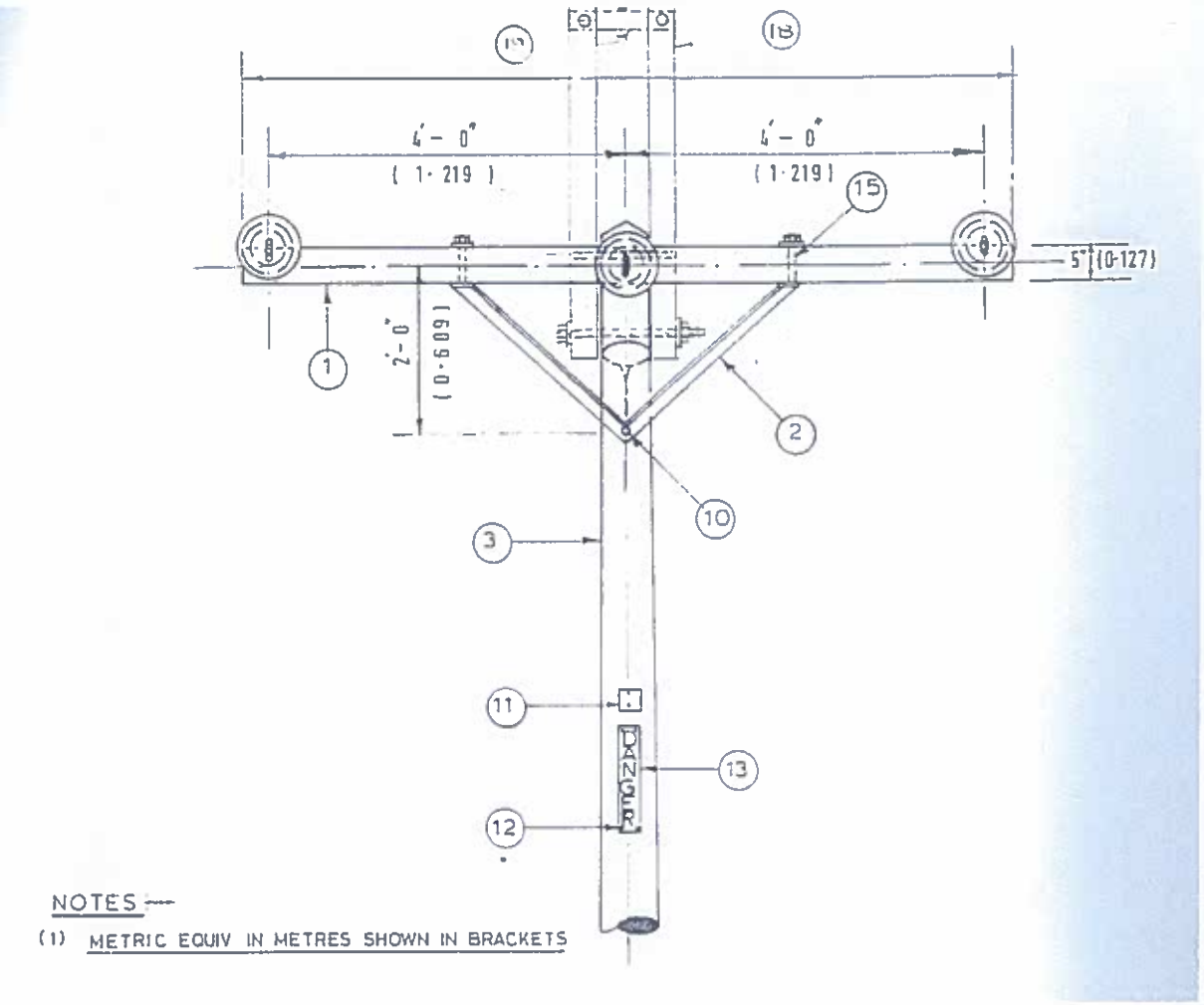

FIG. 17: APPLICATION OF 33KV ANGLE TIE STRAP (item 2 in drawing, shown with wooden cross-arm - same item used on steel cross-arm)

NOTE: *All dimensions are in millimetres unless otherwise stated for all the drawings in Annex B.*